POS.	JUNIOR 640	BIG 800	BEST 960	
1	35400015		35600009	Column
2	45400018		45600009	Key
3	35400001		35600001	Base
4	35400003		35600003	Support
5	45400019		45600010	Screw
6	00000117		00000117	Nut
7	45600011		45600011	Corn
8	00000110		00000114	Nut
9	00350815		00361015	Screw
10	00000020		00000021	Washer
11	00371209		00381409	Screw
12	00000022		00000023	Washer
13	00000117		00000120	Nut
14	00361005		00361006	Screw
15	00000214			Key
16	00004318			Pin
17	00050807			Screw
18	00000022			Washer
19	45400077			Stud
20	00003905			Handle
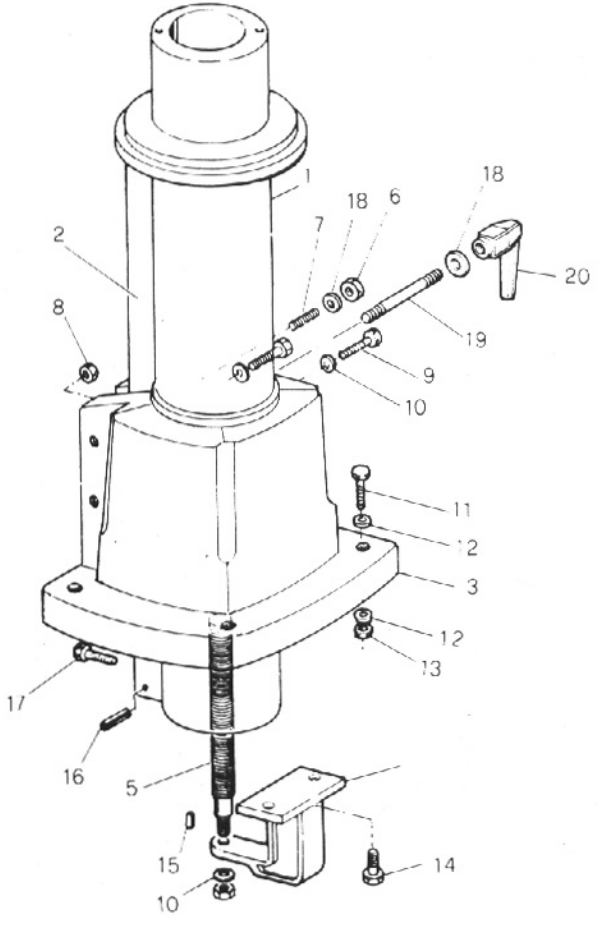
TAVOLA N° 2 - Gruppo Colonna
Column group