TABLE 8: REFERENCE PIN

Ed. 09/01 Rev. 0

POS.	CODE	NAME	Q.TY
1	00018405	V-TE M 8 X 16	4
2	00018521	R-CILD M 8	4
3	49901016	REFERENCE PIN SQUARE (46)	1
4	00004303	ELASTIC PIN .DIAM.4X14 6873	1
5	49901015	REFERENCE PIN BLOCK (46)	1
6	49900014	REFERENCE PIN	1
7	49900017	PIN SPRING	1
8	00003923	BOTECO BALL KNOB ART100-20 M5	1

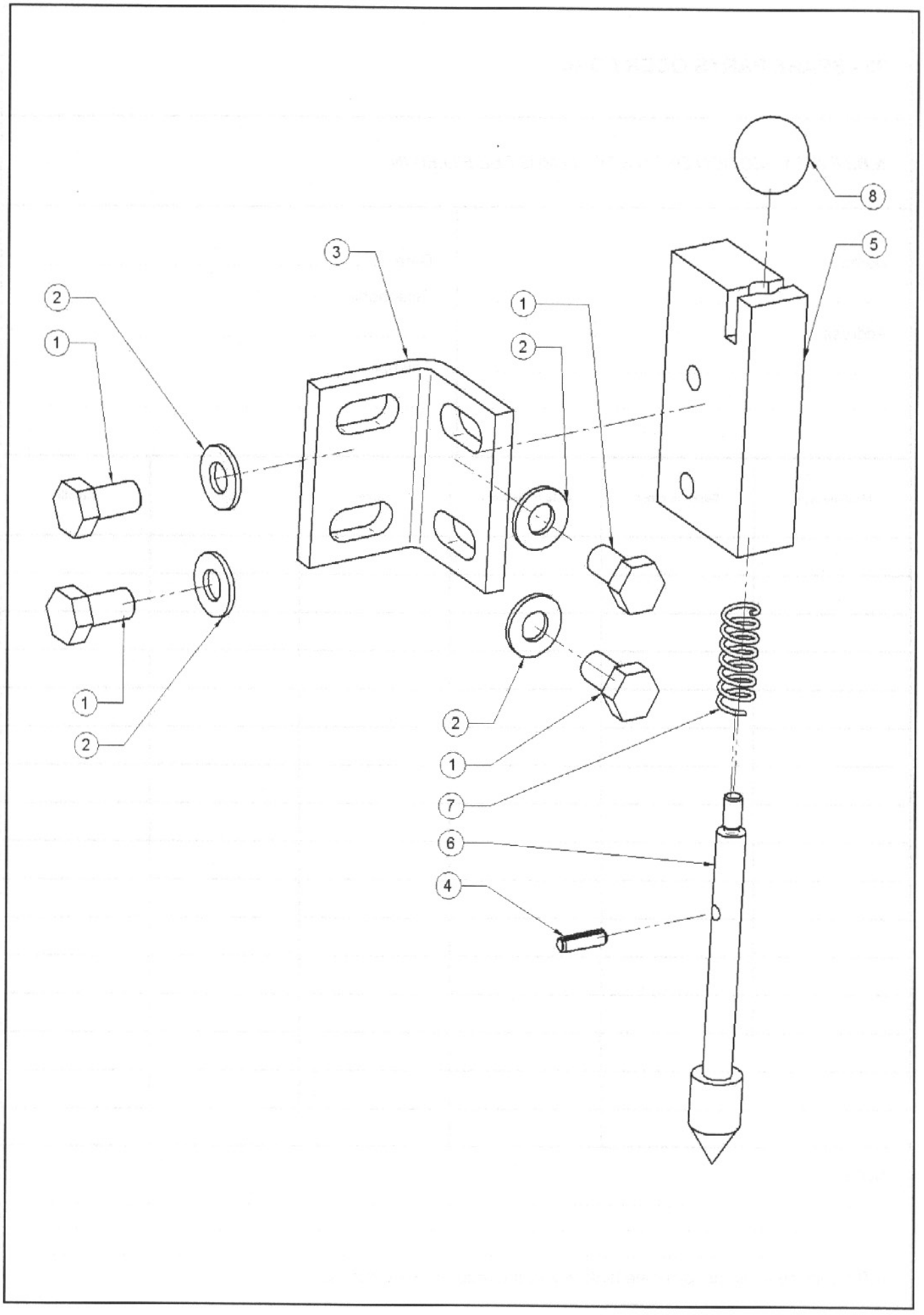
8
5
3
2
1
1
2
1
2
1
2
2
1
7
6
4